ARDEN TILTROTOR

ATR022

ARDEN EQUIPMENT

FEATURES :

L'ATR022 is compatible with all excavators from 18 to 22T.

L'ATR022 is one of the most compact tiltrotator on the market.

Its robust design will adapt to all your machine configurations with its 2LP and OSCP control system.

It is available with 5 type of quick hitches :

- **AIO550**
- **QA52**
- **UA53**
- **AECW40**
- **AES70**

The ATR022 is compatible with the AIO350 which allow the operator to switch equipments without getting off the cabin.

OPTIONS :

- Grouped lubrication.
- Integrated nozzle clamp.
- Sensor for 3D/GPS system.

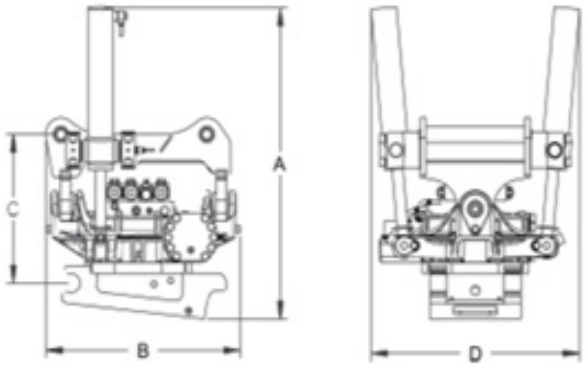

ADVANTAGES :

- Control systems 2LP et OSCP available.
- Safety valves integrated into the cylinders.
- Additional hydraulic line
- Endless 360 ° rotation and 40 ° tilt on each side.
- Safer work environment.
- Time saving on sites.
- Reduce machines transport on sites.
- Less fuel consumption.

Technical specifications	
Height (A)	1000mm
Depth (B)	830mm
Height (C)	600mm
Lenght (D)	830mm
Weight	550kg
Tilt angle	2x40°
Rotation	360° sans fin
Recommended Hydraulic Flow	40-60 l/min
Max Pressure	210 bars

Tel. +33 (0)3 24 33 64 30 - contact@arden-equipment.com - www.arden-equipment.com