Quick Coupler QA33H

Date of review: **02-févr.-24** Review: **B**

Exploded view

QA33H_B

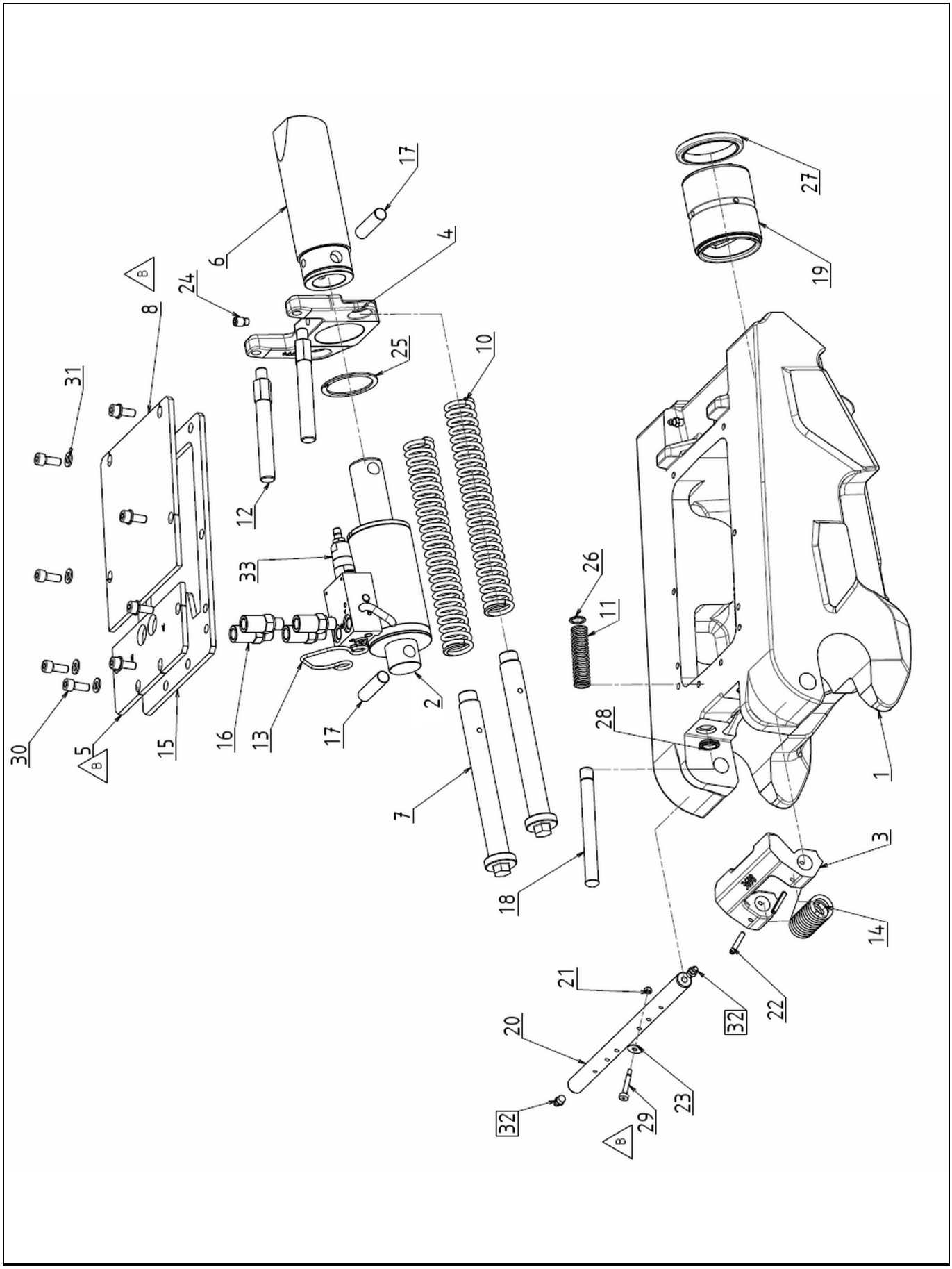

Quick Coupler QA33H

Date of review: **02-févr.-24** Review: **B**

Pos	Part Number	Qty	Description	S/No - Remarks
01	X2951H	1	Frame	
02	V1320-RP	1	Cylinder	
03	X3698	1	Security hook	
04	X3774	1	Spring stirrup	
05	X95490-100	1	Higher cap	
06	X91981	1	Pin	
07	X92018	2	Spring rod	
08	X95490-200	1	Higher cap	
10	X92030	2	Spring	
11	X94867	2	Spring	
12	X94773	2	Spring rod	
13	X92101	1	Pin clamp	
14	X94866	1	Spring	
15	X94869	1	Cover seal	
16	X94245	4	Connection	
17	X92048	2	Pin	
18	X94772	2	Pin	
19	X80198	1	Bushing	
20	X72974	1	Pin	
21	HFR04	1	Self-locking nut	
22	GE05-030	2	Spring-type straight pin	
23	RP05L	1	Flat washer	
24	HCTL10-016C12	1	Locking screw	
25	CIR055E	1	Retaining ring for bore	
26	CIR014E	2	Retaining ring for bore	
27	J30068	1	Wiper ring	
28	J30475	2	Wiper ring	
29	X95551	1	Bolt	
30	CHC08-020C12	8	Socket head capscrew	
31	RP08	8	Flat washer	
32	GM8	3	Grease nipple	
33	CLAP30052	1	Choke valve	